Work Order ID 92001

October-19-12 12:48:07 PM

92001

Item ID: 647.1612

Revision ID:

Item Name: Splice Plate

Start Date: 19/10/2012 **Start Qty:** 2.00 *2*

Required Date: 02/11/2012 **Req'd Qty:** 2.00 *2*

Reference:

Accept *N900040100*

Setup Start *NS1*

Stop *NS2*

Cust Item ID:

Customer:

Run Start *NR1*

Stop *NR2*

Approvals: **Process Plan:** MLJ **Date:** 12-10-19 **Tooling:** **Date:**

QC: **Date:** **SPC (Y/N):** **Date:**

Sequence ID/ Work Center ID	Operation Description	Set Up/ Run Hours	Tool ID	Tool #	Plan Code	Accept Qty	Reject Qty	Reject Number	Insp. Stamp
Draw Nbr	**Revision Nbr**								
647.1600	N/C								
110		0.00							
110									
Waterjet	**Memo**	0.00				(3)			B12-10-31
FLOW CNC Waterjet	1-Cut as per Dwg Dwg Rev: N/C Prog Rev: N/C								
2024.090									B12-10-31
	2-Deburr if necessary								
120	QC2- Inspect parts off machine FAI/FAIB	0.00							
120									
QC	**Memo**	0.00							
Quality Control									

(3)

DQA: _____ Date: _____

NCR: Yes / No

WORK ORDER NON-CONFORMANCE / UPDATE

QA Closed: Date:

Work Order: _____

Part No. _____

NCR No. _____

DISPOSITION

- Rework ☐
- Scrap ☐
- Use-as-is ☐
- Work Order Update ☐

AGAINST DEPARTMENT/PROCESS

Skid-tube ☐	Crosstube ☐	Water Jet ☐	Engineering ☐
Machining ☐	Small Fab ☐	Prod. Eng. Coor. ☐	Quality ☐
Thermoforming ☐	Finishing ☐	Rec/Store/Packaging ☐	Other ☐
Large Fab ☐	Composite ☐	Supplier ☐	☐

Root Cause		Date	Step	Qty	Description of work order update or Non-conformance	Initial Chief Eng	Action Description	Sign & Date	Verification	QC Inspector
Doc/Data	☐									
Equip/Tooling	☐									
Operator	☐									
Material	☐									
Setup	☐									
Other	☐									
Process	☐									
Supplier	☐									
Training	☐									
Unapproved	☐									

FAULT CATEGORY

Landing Gear

- ☐ Bending
- ☐ Centre Not Concentric to O/S
- ☐ Cracks
- ☐ Crushed/Crimped.
- ☐ Cuffs
- ☐ Heat Treat
- ☐ Inspection Strip in Tube
- ☐ Ripples in Bend
- ☐ Torque Waves in Extrusion
- ☐ Turning Sequence
- ☐ Wave/Twist in Tube

General

- ☐ Bend
- ☐ BOM/Route
- ☐ Broken/Damaged
- ☐ Burrs
- ☐ Contamination
- ☐ Countersink
- ☐ Cut Too Short
- ☐ Drill Holes
- ☐ Drawing
- ☐ Finish
- ☐ Folio
- ☐ Grain
- ☐ Hardware
- ☐ Inspection Incomplete
- ☐ Instructions Incomplete/Unclear
- ☐ Maintenance
- ☐ Mislabeled
- ☐ Misread
- ☐ Offset
- ☐ Out of Calibration
- ☐ Out of Sequence
- ☐ Outside Dimensions
- ☐ Ovalized
- ☐ Over/Under tolerance
- ☐ Part Incorrect
- ☐ Part Lost/Missing
- ☐ Part Moved
- ☐ Positioned Wrong
- ☐ Power Loss/Surge
- ☐ Pressure/Forced
- ☐ Temperature/Cure
- ☐ Weld
- ☐ Wrong Stock Pulled
- ☐ Other _____

Work Order ID 92001

October-19-12 12:48:07 PM

92001

Item ID: 647.1612
Revision ID:
Item Name: Splice Plate
Start Date: 19/10/2012 **Start Qty:** 2.00 *2*
Required Date: 02/11/2012 **Req'd Qty:** 2.00 *2*
Reference:

Accept *N900040100*

Setup Start *NS1*
Stop *NS2*

Cust Item ID:
Customer:

Run Start *NR1*
Stop *NR2*

Approvals: **Process Plan:** _____ **Date:** _____ **Tooling:** _____ **Date:** _____
QC: _____ **Date:** _____ **SPC (Y/N):** _____ **Date:** _____

Sequence ID/ Work Center ID	Operation Description	Set Up/ Run Hours	Tool ID	Tool #	Plan Code	Accept Qty	Reject Qty	Reject Number	Insp. Stamp
130 *130* QC Quality Control	QC8- Inspect parts - second check	0.00 DAS 15 12.11.01				3			
	Memo	0.00							
140 *140* Outsource4 Outsource process - Anodize	Outsource process-Anodize per QSI017 4.1.10.1	0.00							
	Memo Issue P/O: 18304 HARD ANODIZE, COLOR BLACK AS PER DWG.(SEE NOTE 3)	0.00					12-11-01		
150 *150* Packaging Packaging	Receive & Inspect for Damage & Mat'l Certs	0.00							
	Memo	0.00					12/4/12 (3)		

DQA: _____ Date: _____

NCR: Yes / No

WORK ORDER NON-CONFORMANCE / UPDATE

QA Closed: Date:

Work Order: _____

Part No. _____

NCR No. _____

DISPOSITION

- Rework ☐
- Scrap ☐
- Use-as-is ☐
- Work Order Update ☐

AGAINST DEPARTMENT/PROCESS

Skid-tube ☐	Crosstube ☐	Water Jet ☐	Engineering ☐
Machining ☐	Small Fab ☐	Prod. Eng. Coor. ☐	Quality ☐
Thermoforming ☐	Finishing ☐	Rec/Store/Packaging ☐	Other ☐
Large Fab ☐	Composite ☐	Supplier ☐	☐

Root Cause		Date	Step	Qty	Description of work order update or Non-conformance	Initial Chief Eng	Action Description	Sign & Date	Verification	QC Inspector
Doc/Data	☐									
Equip/Tooling	☐									
Operator	☐									
Material	☐									
Setup	☐									
Other	☐									
Process	☐									
Supplier	☐									
Training	☐									
Unapproved	☐									

FAULT CATEGORY

Landing Gear

- ☐ Bending
- ☐ Centre Not Concentric to O/S
- ☐ Cracks
- ☐ Crushed/Crimped
- ☐ Cuffs
- ☐ Heat Treat
- ☐ Inspection Strip in Tube
- ☐ Ripples in Bend
- ☐ Torque Waves in Extrusion
- ☐ Turning Sequence
- ☐ Wave/Twist in Tube

General

- ☐ Bend
- ☐ BOM/Route
- ☐ Broken/Damaged
- ☐ Burrs
- ☐ Contamination
- ☐ Countersink
- ☐ Cut Too Short
- ☐ Drill Holes
- ☐ Drawing
- ☐ Finish
- ☐ Folio
- ☐ Grain
- ☐ Hardware
- ☐ Inspection Incomplete
- ☐ Instructions Incomplete/Unclear
- ☐ Maintenance
- ☐ Mislabeled
- ☐ Misread
- ☐ Offset
- ☐ Out of Calibration
- ☐ Out of Sequence
- ☐ Outside Dimensions
- ☐ Ovalized
- ☐ Over/Under tolerance
- ☐ Part Incorrect
- ☐ Part Lost/Missing
- ☐ Part Moved
- ☐ Positioned Wrong
- ☐ Power Loss/Surge
- ☐ Pressure/Forced
- ☐ Temperature/Cure
- ☐ Weld
- ☐ Wrong Stock Pulled
- ☐ Other

_____

_____

_____

Work Order ID 92001

October-19-12 12:48:07 PM

92001

Item ID: 647.1612

Revision ID:

Item Name: Splice Plate

Start Date: 19/10/2012 **Start Qty:** 2.00 *2*

Required Date: 02/11/2012 **Req'd Qty:** 2.00 *2*

Reference:

Accept *N900040100*

Setup Start *NS1*

Stop *NS2*

Cust Item ID:

Customer:

Run Start *NR1*

Stop *NR2*

Approvals: **Process Plan:** _____ **Date:** _____ **Tooling:** _____ **Date:** _____

QC: _____ **Date:** _____ **SPC (Y/N):** _____ **Date:** _____

Sequence ID/ Work Center ID	Operation Description	Set Up/ Run Hours	Tool ID	Tool #	Plan Code	Accept Qty	Reject Qty	Reject Number	Insp. Stamp
160	QC5- Inspect part completeness to step on W/O	0.00							
160						3			DAS 05 12 11 07
QC	Memo	0.00							
Quality Control									
170		0.00							
170						3	Ø	Ø	AJ 12-11-9
SprayPaint	Memo	0.00							
Spray Painting	PRIME IAW MIL-P-23377J TYPE1 CLASS N AS PER DWG. (SEE NOTE 3)								
	CARDINAL 4860-50 PRIMER BATCH: 122543								
180	QC14- Inspect Spray Paint	0.00							
180						3			DAS 05 12 11 11
QC	Memo	0.00							
Quality Control									

DQA: _____ Date: _____

NCR: Yes / No

WORK ORDER NON-CONFORMANCE / UPDATE

QA Closed: Date:

Work Order: _____

Part No. _____

NCR No. _____

DISPOSITION

- Rework ☐
- Scrap ☐
- Use-as-is ☐
- Work Order Update ☐

AGAINST DEPARTMENT/PROCESS

Skid-tube ☐	Crosstube ☐	Water Jet ☐	Engineering ☐
Machining ☐	Small Fab ☐	Prod. Eng. Coor. ☐	Quality ☐
Thermoforming ☐	Finishing ☐	Rec/Store/Packaging ☐	Other ☐
Large Fab ☐	Composite ☐	Supplier ☐	☐

Root Cause		Date	Step	Qty	Description of work order update or Non-conformance	Initial Chief Eng	Action Description	Sign & Date	Verification	QC Inspector
Doc/Data	☐									
Equip/Tooling	☐									
Operator	☐									
Material	☐									
Setup	☐									
Other	☐									
Process	☐									
Supplier	☐									
Training	☐									
Unapproved	☐									

FAULT CATEGORY

Landing Gear

- ☐ Bending
- ☐ Centre Not Concentric to O/S
- ☐ Cracks
- ☐ Crushed/Crimped
- ☐ Cuffs
- ☐ Heat Treat
- ☐ Inspection Strip in Tube
- ☐ Ripples in Bend
- ☐ Torque Waves in Extrusion
- ☐ Turning Sequence
- ☐ Wave/Twist in Tube

General

- ☐ Bend
- ☐ BOM/Route
- ☐ Broken/Damaged
- ☐ Burrs
- ☐ Contamination
- ☐ Countersink
- ☐ Cut Too Short
- ☐ Drill Holes
- ☐ Drawing
- ☐ Finish
- ☐ Folio
- ☐ Grain
- ☐ Hardware
- ☐ Inspection Incomplete
- ☐ Instructions Incomplete/Unclear
- ☐ Maintenance
- ☐ Mislabeled
- ☐ Misread
- ☐ Offset
- ☐ Out of Calibration
- ☐ Out of Sequence
- ☐ Outside Dimensions
- ☐ Ovalized
- ☐ Over/Under tolerance
- ☐ Part Incorrect
- ☐ Part Lost/Missing
- ☐ Part Moved
- ☐ Positioned Wrong
- ☐ Power Loss/Surge
- ☐ Pressure/Forced
- ☐ Temperature/Cure
- ☐ Weld
- ☐ Wrong Stock Pulled
- ☐ Other _____

Work Order ID 92001

October-19-12 12:48:07 PM

92001

Item ID: 647.1612

Revision ID:

Item Name: Splice Plate

Start Date: 19/10/2012 **Start Qty:** 2.00 *2*

Required Date: 02/11/2012 **Req'd Qty:** 2.00 *2*

Reference:

Accept *N900040100*

Setup Start *NS1*

Stop *NS2*

Cust Item ID:

Customer:

Run Start *NR1*

Stop *NR2*

Approvals: **Process Plan:** _____ **Date:** _____ **Tooling:** _____ **Date:** _____

QC: _____ **Date:** _____ **SPC (Y/N):** _____ **Date:** _____

Sequence ID/ Work Center ID	Operation Description	Set Up/ Run Hours	Tool ID	Tool #	Plan Code	Accept Qty	Reject Qty	Reject Number	Insp. Stamp
190	Identify as per dwg & Stock Location: 85-658	0.00							
190									
Packaging	**Memo**	0.00				32			SP 12-11-12
Packaging	***IDENTIFY AS PER APICAL MPP-120 BY STAMPING THE P# AND REV***								
200	QC21- Final Inspection - Work Order Release	0.00							
200									
QC	**Memo**	0.00							12/11/13
Quality Control									MK 12-11-12

DQA: _____ Date: _____

NCR: Yes / No

WORK ORDER NON-CONFORMANCE / UPDATE

QA Closed: Date:

Work Order: _____

Part No. _____

NCR No. _____

DISPOSITION

- Rework ☐
- Scrap ☐
- Use-as-is ☐
- Work Order Update ☐

AGAINST DEPARTMENT/PROCESS

Skid-tube ☐	Crosstube ☐	Water Jet ☐	Engineering ☐
Machining ☐	Small Fab ☐	Prod. Eng. Coor. ☐	Quality ☐
Thermoforming ☐	Finishing ☐	Rec/Store/Packaging ☐	Other ☐
Large Fab ☐	Composite ☐	Supplier ☐	☐

Root Cause		Date	Step	Qty	Description of work order update or Non-conformance	Initial Chief Eng	Action Description	Sign & Date	Verification	QC Inspector
Doc/Data	☐									
Equip/Tooling	☐									
Operator	☐									
Material	☐									
Setup	☐									
Other	☐									
Process	☐									
Supplier	☐									
Training	☐									
Unapproved	☐									

FAULT CATEGORY

Landing Gear

- ☐ Bending
- ☐ Centre Not Concentric to O/S
- ☐ Cracks
- ☐ Crushed/Crimped
- ☐ Cuffs
- ☐ Heat Treat
- ☐ Inspection Strip in Tube
- ☐ Ripples in Bend
- ☐ Torque Waves in Extrusion
- ☐ Turning Sequence
- ☐ Wave/Twist in Tube

General

- ☐ Bend
- ☐ BOM/Route
- ☐ Broken/Damaged
- ☐ Burrs
- ☐ Contamination
- ☐ Countersink
- ☐ Cut Too Short
- ☐ Drill Holes
- ☐ Drawing
- ☐ Finish
- ☐ Folio
- ☐ Grain
- ☐ Hardware
- ☐ Inspection Incomplete
- ☐ Instructions Incomplete/Unclear
- ☐ Maintenance
- ☐ Mislabeled
- ☐ Misread
- ☐ Offset
- ☐ Out of Calibration
- ☐ Out of Sequence
- ☐ Outside Dimensions
- ☐ Ovalized
- ☐ Over/Under tolerance
- ☐ Part Incorrect
- ☐ Part Lost/Missing
- ☐ Part Moved
- ☐ Positioned Wrong
- ☐ Power Loss/Surge
- ☐ Pressure/Forced
- ☐ Temperature/Cure
- ☐ Weld
- ☐ Wrong Stock Pulled
- ☐ Other

_____

_____

_____

Picklist Print

October-19-12 12:48:10 PM

Work Order ID: 92001

92001

Parent Item: 647.1612

647 1612

Parent Item Name: Splice Plate

Start Date: 19/10/2012 **Required Date:** 02/11/2012

Start Qty: 2.00 **Required Qty:** 2.00

Comments: IPP REV:A 12.10.04 NEW ISSUE DD VERF:JFS

Component Item ID/ Item Name	Replacement Item ID	Mfg/ Purch	Bin Item	Primary Location	Last Location	Route Seq ID	Unit of Measure	Qty on Hand	Qty per Kit	Total Qty	Qty Issued	Date Issued	Status
M2024T3S.090		Purchased	No			110	sf	48.0000	0.0322	0.067789			
M2024T3S.090									**			B12-10-31	
2024-T3 .090 sheet													

Location	Loc Qty	Loc Code
MAT022	48	
123287	48	

(3)

123287

DQA: _____ Date: _____

NCR: Yes / No

WORK ORDER NON-CONFORMANCE / UPDATE

QA Closed: Date:

Work Order: _____

Part No. _____

NCR No. _____

DISPOSITION

- Rework ☐
- Scrap ☐
- Use-as-is ☐
- Work Order Update ☐

AGAINST DEPARTMENT/PROCESS

Skid-tube ☐	Crosstube ☐	Water Jet ☐	Engineering ☐
Machining ☐	Small Fab ☐	Prod. Eng. Coor. ☐	Quality ☐
Thermoforming ☐	Finishing ☐	Rec/Store/Packaging ☐	Other ☐
Large Fab ☐	Composite ☐	Supplier ☐	☐

Root Cause		Date	Step	Qty	Description of work order update or Non-conformance	Initial Chief Eng	Action Description	Sign & Date	Verification	QC Inspector
Doc/Data	☐									
Equip/Tooling	☐									
Operator	☐									
Material	☐									
Setup	☐									
Other	☐									
Process	☐									
Supplier	☐									
Training	☐									
Unapproved	☐									

FAULT CATEGORY

Landing Gear

- ☐ Bending
- ☐ Centre Not Concentric to O/S
- ☐ Cracks
- ☐ Crushed/Crimped.
- ☐ Cuffs
- ☐ Heat Treat
- ☐ Inspection Strip in Tube
- ☐ Ripples in Bend
- ☐ Torque Waves in Extrusion
- ☐ Turning Sequence
- ☐ Wave/Twist in Tube

General

- ☐ Bend
- ☐ BOM/Route
- ☐ Broken/Damaged
- ☐ Burrs
- ☐ Contamination
- ☐ Countersink
- ☐ Cut Too Short
- ☐ Drill Holes
- ☐ Drawing
- ☐ Finish
- ☐ Folio
- ☐ Grain
- ☐ Hardware
- ☐ Inspection Incomplete
- ☐ Instructions Incomplete/Unclear
- ☐ Maintenance
- ☐ Mislabeled
- ☐ Misread
- ☐ Offset
- ☐ Out of Calibration
- ☐ Out of Sequence
- ☐ Outside Dimensions
- ☐ Ovalized
- ☐ Over/Under tolerance
- ☐ Part Incorrect
- ☐ Part Lost/Missing
- ☐ Part Moved
- ☐ Positioned Wrong
- ☐ Power Loss/Surge
- ☐ Pressure/Forced
- ☐ Temperature/Cure
- ☐ Weld
- ☐ Wrong Stock Pulled
- ☐ Other _____

THE INFORMATION CONTAINED IN THIS DRAWING IS THE SOLE PROPERTY OF APICAL INDUSTRIES. ANY REPRODUCTION IN PART OR WHOLE WITHOUT THE WRITTEN PERMISSION OF APICAL INDUSTRIES IS PROHIBITED.

REV	DESCRIPTION	DATE	APPROVED
	LAST PRODUCTION REVISION PER		
	CHANGE REFERENCE		

NOTES:

1. MATERIAL: ALUMINUM 7075-T651 AMS-QQ-A-250/12
2. MATERIAL: ALUMINUM 2024-T3 PER AMS-QQ-A-250/4
3. FINISH: HARD ANODIZE IAW MIL-A-8625 TYPE III, CLASS 2, COLOR BLACK;
   CARDINAL 4860-50 PRETREATMENT PRIMER
   PRIME IAW MIL-P 23377J TYPE I CLASS N
4. DEBURR AND BREAK ALL SHARP EDGES
5. IDENTIFY IAW MPP-120

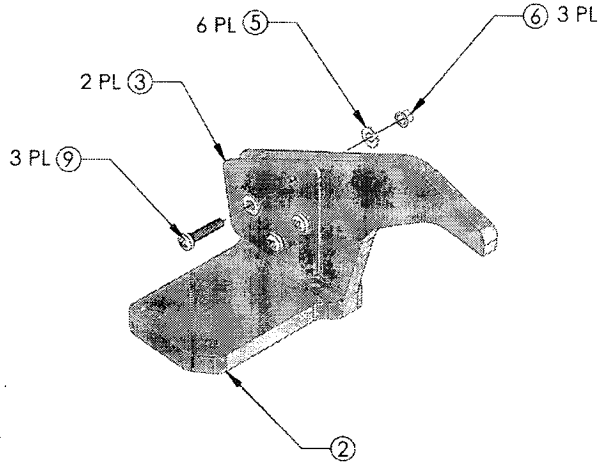

647.1601 SHOWN EXPLODED

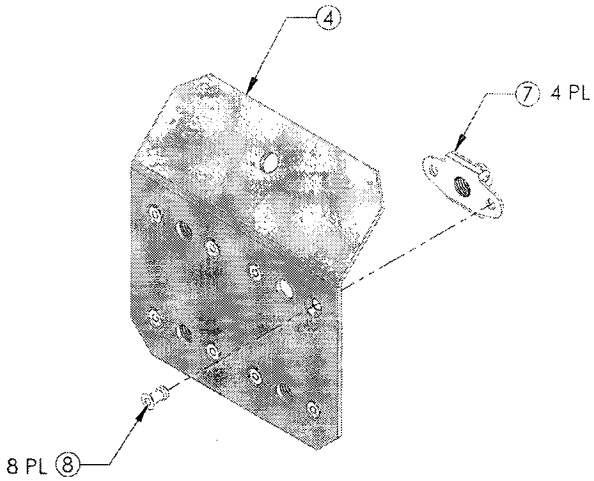

647.1602 SHOWN EXPLODED

SHOP COPY
RETURN TO
ENGINEERING
UNCONTROLLED COPY
SUBJECT TO AMENDMENT
WITHOUT NOTICE
WORK ORDER
NO. 92001 MCS
12-10-19

			FIND #	PART #	DESCRIPTION	MATL	SPEC.
		3	9	601.2989	SCREW	MS27039-0812	
	8		8	601.2980	NUTPLATE RIVET	CCP26455-3-04	
	4		7	601.1900	NUTPLATE	MS21059-3	
		3	6	601.2973	LOCKNUT	MS21042-08	
		6	5	601.2764	WASHER	NAS1149FN832P	
	1		4	647.1613	DOUBLER	(2)	(3)
		2	3	647.1612	SPLICE PLATE	(2)	(3)
		1	2	647.1611	WIPER DEFLECTOR, AFT	(1)	(3)
			1	647.1610	WIPER DEFLECTOR, FWD	(1)	(3)
	X			647.1602	DOUBLER ASSY		
		X		647.1601	WIPER DEFLECTOR ASSY, AFT		

QTY .1602 .1601 — PARTS LIST

NEXT ASSY (S): 647.1300

ORIGINAL DATE (MM/DD/YR): 06-10-09
DRAWN BY: J. CARPENTER — CHECKED: F. BRAVO
DIMENSIONS APPROVAL: F. BRAVO 06-10-09
CONTRACT #:

UNLESS OTHERWISE SPECIFIED DIMENSIONS ARE IN INCHES TOLERANCES ARE:
2 PLACE DECIMALS ±.01
3 PLACE DECIMALS ±.005
ANGLES ± 2°

APICAL INDUSTRIES
2608 TEMPLE HEIGHTS DR.
OCEANSIDE, CA. 92056-3512 (760)724-5300

WIPER DEFLECTOR ASSY

SIZE B | CAGE CODE 07MZ6 | DWG. NO 647.1600 | REV N/C

SCALE NONE | SHEET 1 OF 6

92001

INFORMATION CONTAINED IN THIS DRAWING IS THE SOLE PROPERTY OF APICAL INDUSTRIES AND REPRODUCTION IN PART OR WHOLE WITHOUT THE WRITTEN PERMISSION OF APICAL INDUSTRIES IS PROHIBITED

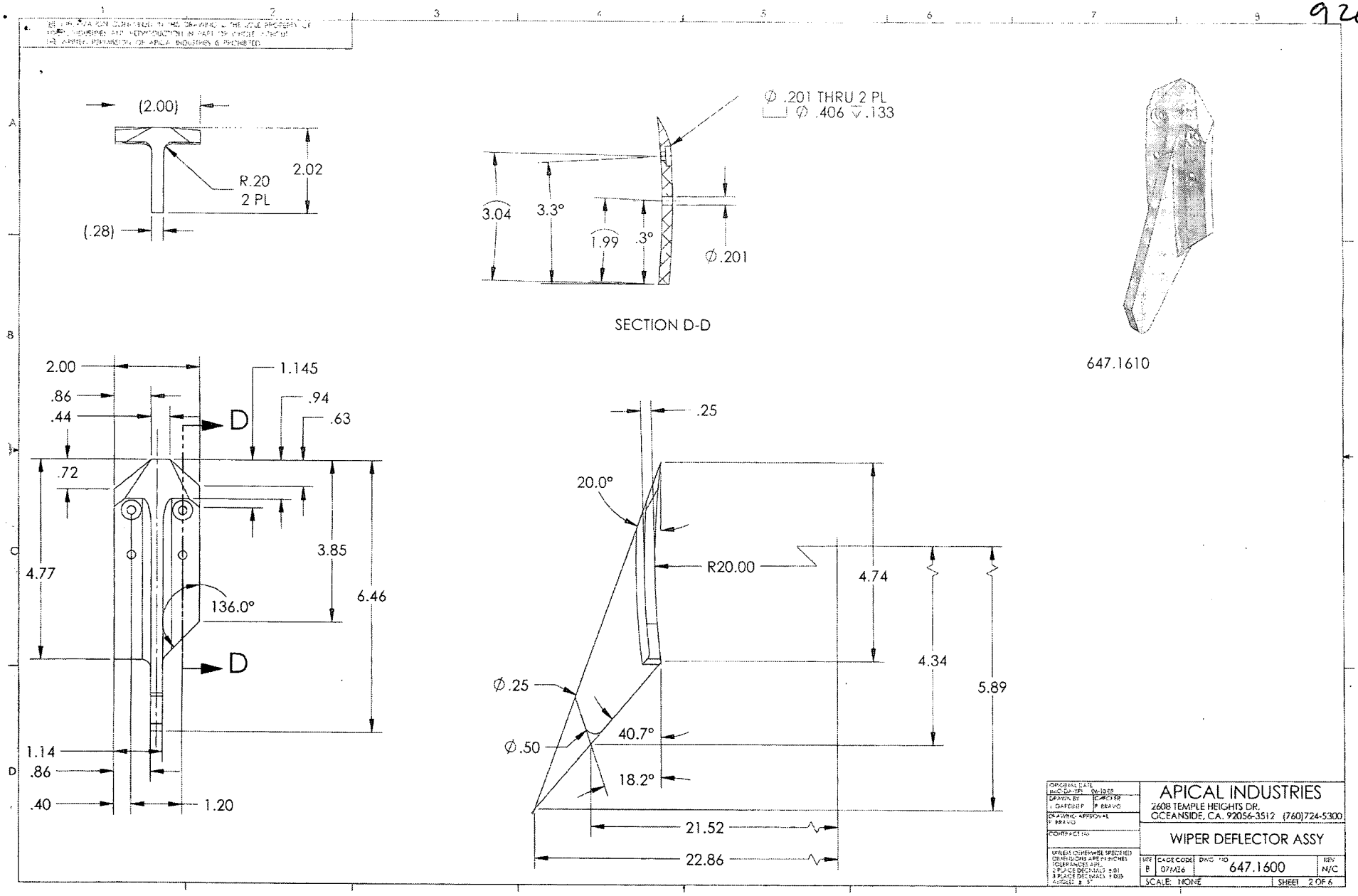

ORIGINAL DATE	
DWG DATE 06-10-03	
DRAWN BY J. CARTERBEP	CHECKED BY P. BRAVO
DRAWING APPROVAL P. BRAVO	
CONTRACT NO	
UNLESS OTHERWISE SPECIFIED DIMENSIONS ARE IN INCHES TOLERANCES ARE: 2 PLACE DECIMALS ±.01 3 PLACE DECIMALS ±.005 ANGLES ± .5°	

APICAL INDUSTRIES
2608 TEMPLE HEIGHTS DR.
OCEANSIDE, CA. 92056-3512 (760)724-5300

WIPER DEFLECTOR ASSY

SIZE	CAGE CODE	DWG NO	REV
B	07M26	647.1600	N/C

SCALE: NONE SHEET 2 OF 6

92001

THE INFORMATION CONTAINED IN THIS DRAWING IS THE SOLE PROPERTY OF APICAL INDUSTRIES. ANY REPRODUCTION IN PART OR WHOLE, WITHOUT THE WRITTEN PERMISSION OF APICAL INDUSTRIES, IS PROHIBITED.

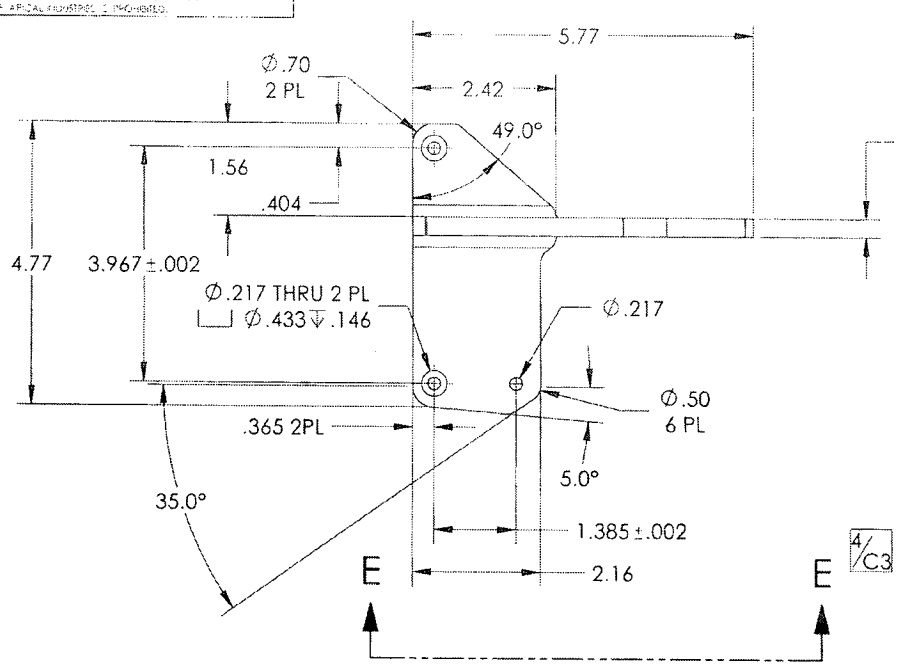

647.1611

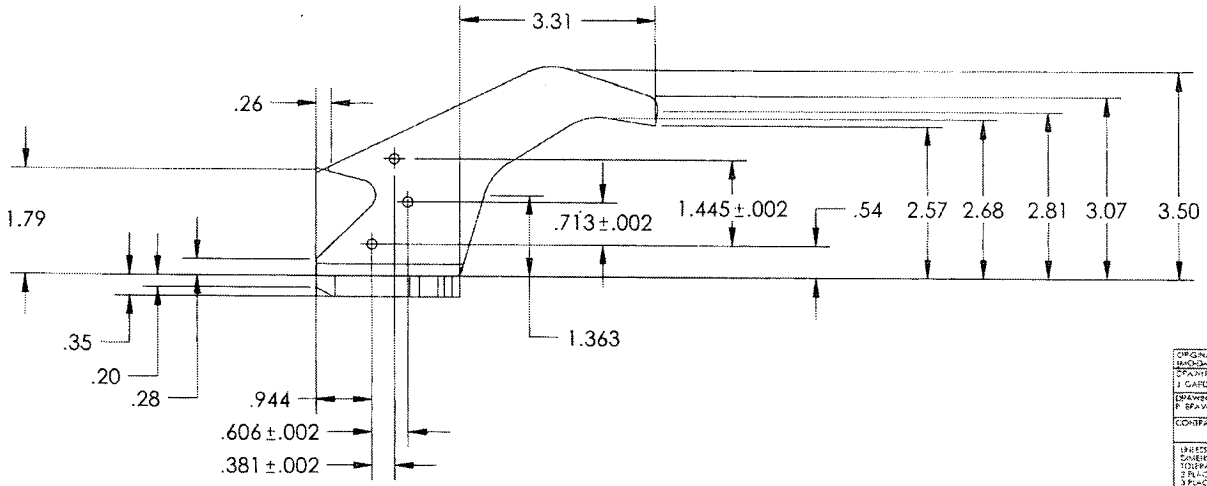

ORIGINAL DATE 04/04/01 (RB) 04/10/09	APICAL INDUSTRIES 2608 TEMPLE HEIGHTS DR. OCEANSIDE, CA. 92056-3512 (760)724-5300
DRAWN BY J. CARDINEP / CHECKED P. BRAVO	
DRAWING APPROVAL P. BRAVO	WIPER DEFLECTOR ASSY
COMPANY No.	
UNLESS OTHERWISE SPECIFIED DIMENSIONS ARE IN INCHES TOLERANCES ARE: 2 PLACE DECIMALS ±.01 3 PLACE DECIMALS ±.005 ANGLES ± 1°	SIZE B · CAGE CODE 07M26 · DWG. NO 647.1600 · REV N/C SCALE: NONE · SHEET 3 OF 6

92001

THE INFORMATION CONTAINED IN THIS DRAWING IS THE SOLE PROPERTY OF
APICAL INDUSTRIES AND REPRODUCTION IN PART OR WHOLE WITHOUT
THE WRITTEN PERMISSION OF APICAL INDUSTRIES IS PROHIBITED

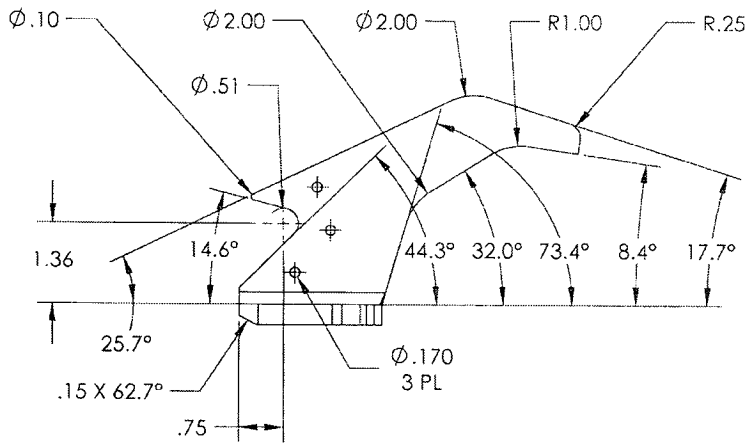

SECTION E-E 3/B4

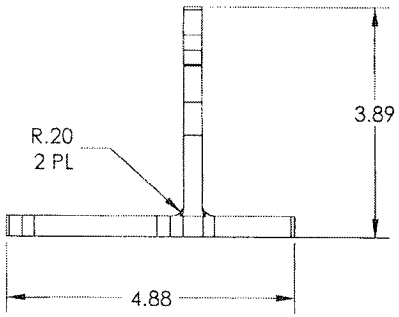

ORIGINAL DATE (M-D-Y) 06-10-07		APICAL INDUSTRIES 2608 TEMPLE HEIGHTS DR. OCEANSIDE, CA. 92056-3512 (760)724-5300
DRAWN BY J. GARDNER	CHECKED P. BRAVO	
DRAWING APPROVAL P. BRAVO		WIPER DEFLECTOR ASSY
CONTRACT NO.		
UNLESS OTHERWISE SPECIFIED DIMENSIONS ARE IN INCHES TOLERANCES ARE: 2 PLACE DECIMALS ± .01 3 PLACE DECIMALS ± .005 ANGLES ± .5°	SIZE B / CAGE CODE 07MZ6 / DWG. NO 647.1600	REV N/C
	SCALE: NONE	SHEET 4 OF 6

92001

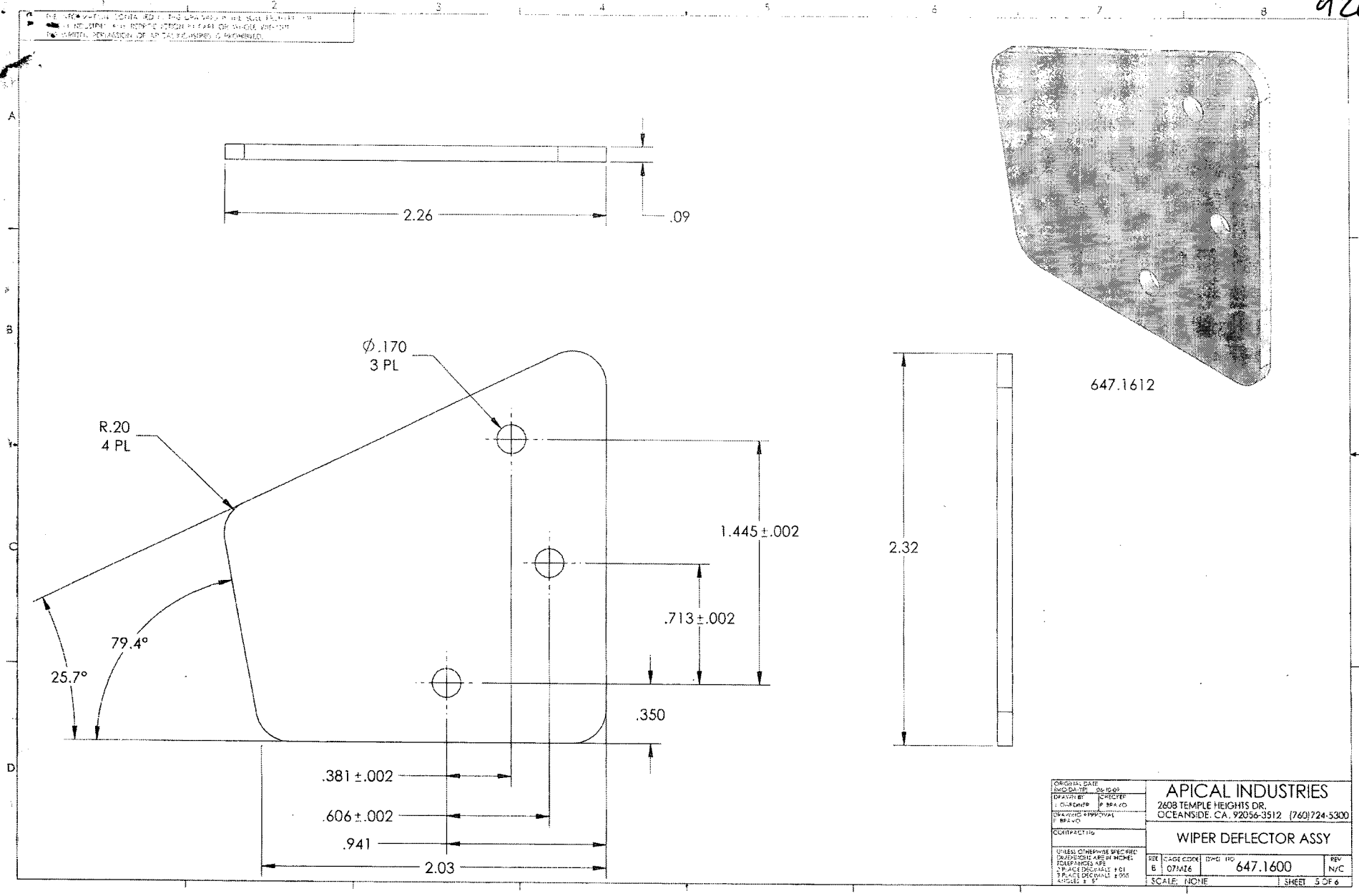

ORIGINAL DATE	
DRAWN BY	CHECKED
CONTRACT NO	
UNLESS OTHERWISE SPECIFIED DIMENSIONS ARE IN INCHES TOLERANCES ARE	

APICAL INDUSTRIES
2608 TEMPLE HEIGHTS DR.
OCEANSIDE, CA. 92056-3512 (760)724-5300

WIPER DEFLECTOR ASSY

SIZE	CAGE CODE	DWG NO	REV
B	07MZ6	647.1600	N/C

SCALE: NONE SHEET 5 OF 6

92001

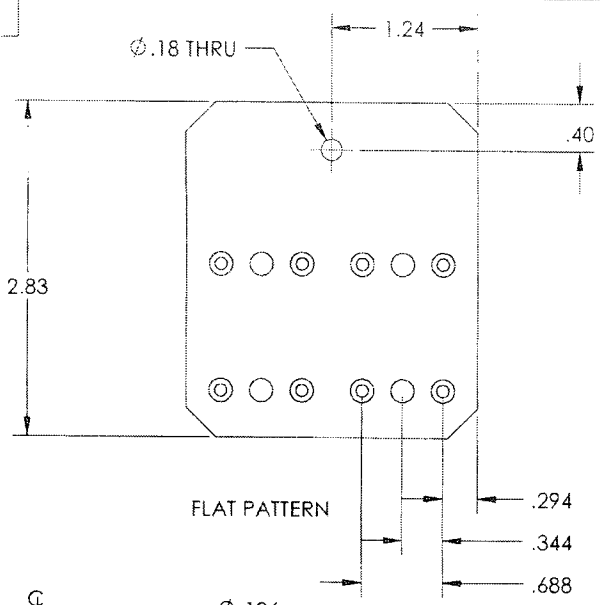

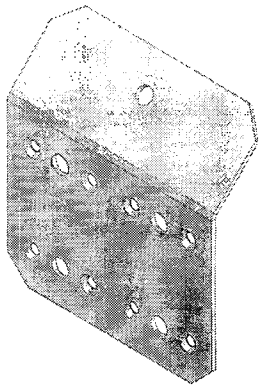

647.1613

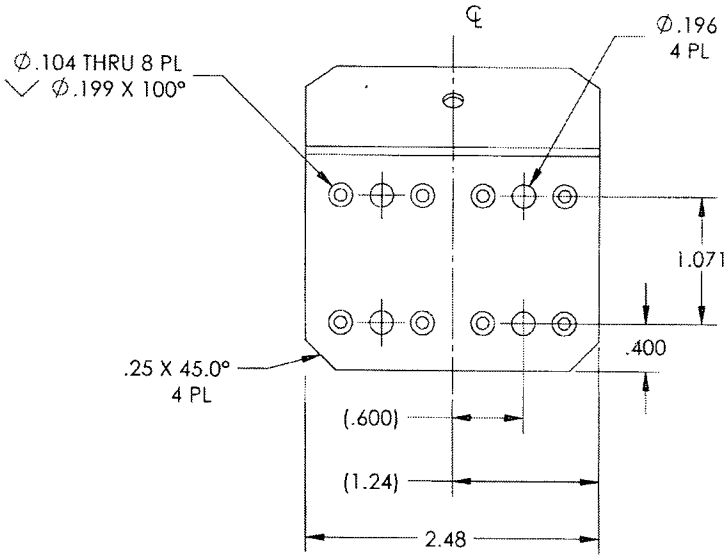

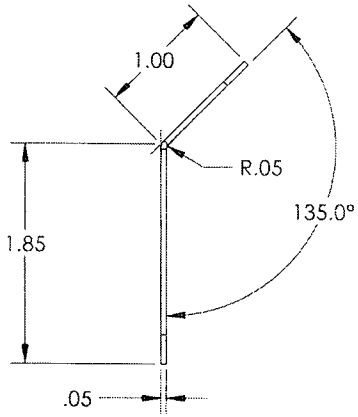

ORIGINAL DATE 06-10-09
DRAWN BY J. GARDINER
CHECKED P. BRAVO
DRAWING APPROVAL P. BRAVO
CONTRACT NO.
UNLESS OTHERWISE SPECIFIED DIMENSIONS ARE IN INCHES TOLERANCES ARE 2 PLACE DECIMALS ±.01 3 PLACE DECIMALS ±.005 ANGLES ± .5°

APICAL INDUSTRIES
2608 TEMPLE HEIGHTS DR.
OCEANSIDE, CA. 92056-3512 (760)724-5300

WIPER DEFLECTOR ASSY

SIZE	CAGE CODE	DWG NO	REV
B	07MZ6	647.1600	N/C

SCALE: NONE SHEET 6 OF 6

DART AEROSPACE LTD	Work Order:	92001
Description: SPIKE PLATE	Part Number:	647 162
Inspection Dwg: 647 162 Rev: N/C		Page 1 of 1

FIRST ARTICLE INSPECTION CHECKLIST

Drawing Dimension	Tolerance	Actual Dimension	Accept	Reject	Method of Inspection	Comments
Ø .170	+.005 -.001	.172	✓		✓ 1B62	
2.37	.005	2.320	✓		✓	
.350	.005	.349	✓		✓	
.713	+/- .002	.713	✓		✓	
1.445	+/- .002	1.446	✓		✓	
.381	+/- .002	.381	✓		✓	
.606	+/- .002	.606	✓		✓	
.941	+/- .005	.943	✓		✓	
.090	+/- .005	.091	✓		✓	

Measured by:	IB	Audited by:	DAS 15	Preliminary Approval:	
Date:	12-10-31	Date:	12/11-01	Date:	

Rev	Date	Change	Revised by	Approved
E	10.04.14	Added preliminary approval	KJ	

10.04.15

A.T.G. Industries Inc.
731, rue Industrielle Rd.
PLATING DEPARTMENT
Rockland, On K4K 1T2
Canada
Ph: (613) 446-4544
Fax: (613) 446-4556

Pack List

Number: 62027 Date: 05-Nov-12

To

DART AEROSPACE LTD
1270 ABERDEEN ST.
HAWKESBURY, ON K6A 1K7
Canada

Ph: 613-632-5200 Fax: 613-632-1185

Ship To

DART AEROSPACE LTD
1270 ABERDEEN ST.
HAWKESBURY, ON K6A 1K7
Canada

Ph: 613-632-5200 Fax: 613-632-1185

Terms	Ship Via

Quantity	Description
1 lot	Part: ASST Rev: 10 PCS 646.9813 10 PCS 646.9811 10 PCS 646.9812 10 PCS 646.9812 2 PCS 646.9811 15 PCS 646.4711 15 PCS 647.4716 15 PCS 647.4712 15 PCS 647.4717 15 PCS 647.4714 15 PCS 647.4715 15 PCS 647.4718 HARD ANODIZE BLACK MIL-A-8625 TYPE III CLASS 2 Job: 20120674 PO: PO18153 Line: 12/14/11
1 lot	Part: ASST Rev: 7 PCS 647.1810 14 PCS 647.1811 12/15 91 PCS 647.1812 2 PCS 647.1612 HARD ANODIZE BLACK MIL-A-8625 TYPE III CLASS 2 Job: 20120673 PO: PO18304 Line:
	Certificate of Conformance

A.T.G. Industries Inc.
731, rue Industrielle Rd.
PLATING DEPARTMENT
Rockland, On K4K 1T2
Canada
Ph: (613) 446-4544
Fax: (613) 446-4556

Pack List

Number: 62027 Date: 05-Nov-12

To

DART AEROSPACE LTD
1270 ABERDEEN ST.
HAWKESBURY, ON K6A 1K7
Canada

Ph: 613-632-5200 Fax: 613-632-1185

Ship To

DART AEROSPACE LTD
1270 ABERDEEN ST.
HAWKESBURY, ON K6A 1K7
Canada

Ph: 613-632-5200 Fax: 613-632-1185

Terms	Ship Via

Quantity	Description
	A.T.G. Industries certifies that all items in this shipment are in conformance with all requirements, specifications and drawings referenced in the purchase order. ISO 9001 : 2008 REGISTERED ATG SALES-2010 TERMS APPLY DATE : 5/11/12 CERTIFIED SIGNATURE : MV RECEIVER SIGNATURE : _____